ILLUMINATION (w/o DAYTIME RUNNING LIGHT)

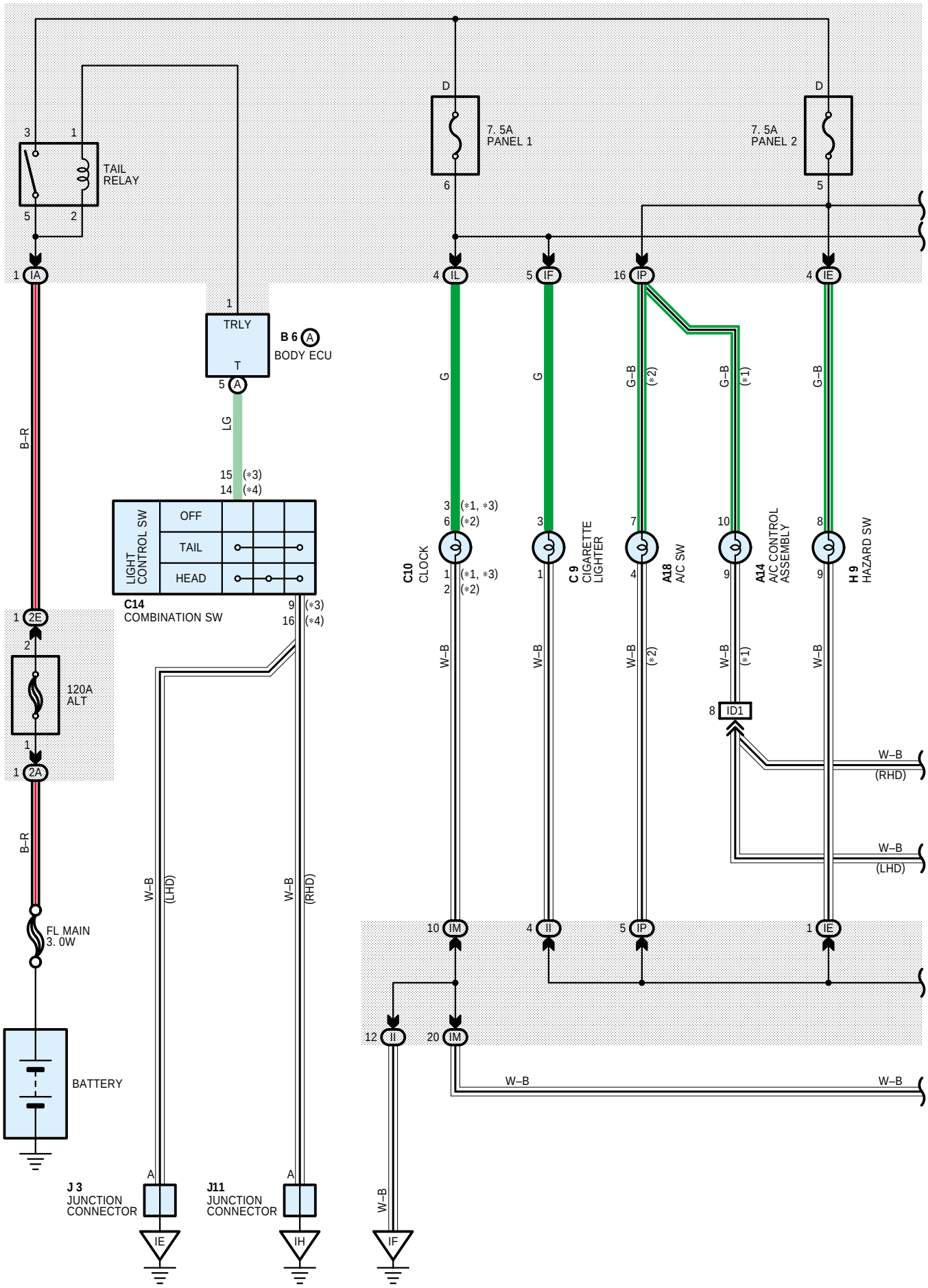

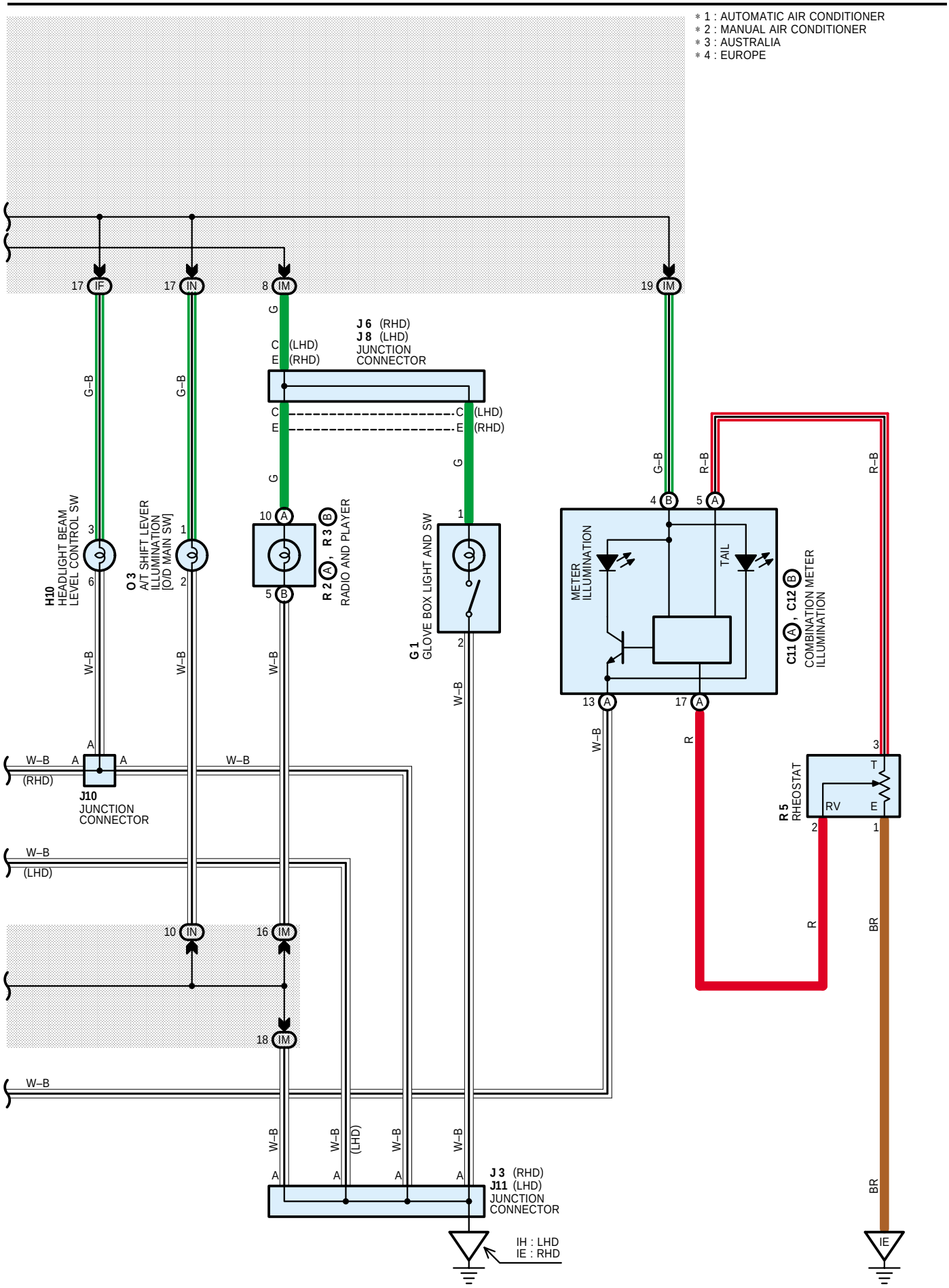
* 1 : AUTOMATIC AIR CONDITIONER
* 2 : MANUAL AIR CONDITIONER
* 3 : AUSTRALIA
* 4 : EUROPE
17 IF
17 IN
8 IM
19 IM
G
C (LHD)
E (RHD)
J 6 (RHD)
J 8 (LHD)
JUNCTION CONNECTOR
G–B
H10
HEADLIGHT BEAM LEVEL CONTROL SW
O 3
A/T SHIFT LEVER ILLUMINATION [O/D MAIN SW]
R 2 A , R 3 B
RADIO AND PLAYER
G 1
GLOVE BOX LIGHT AND SW
R–B
METER ILLUMINATION
TAIL
C11 A , C12 B
COMBINATION METER ILLUMINATION
W–B
(RHD)
J10
JUNCTION CONNECTOR
(LHD)
R
R 5
RHEOSTAT
T
RV
E
BR
10 IN
16 IM
18 IM
J 3 (RHD)
J11 (LHD)
JUNCTION CONNECTOR
IH : LHD
IE : RHD
IE